Outline Drawing

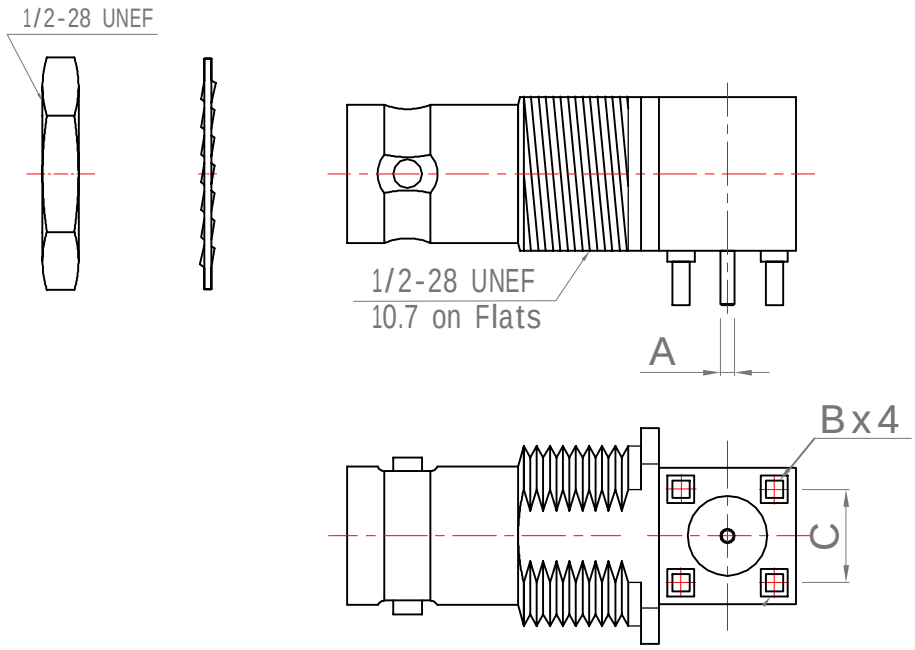

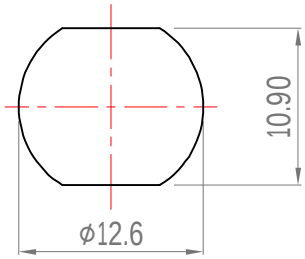

Recommended Panel Cut Out

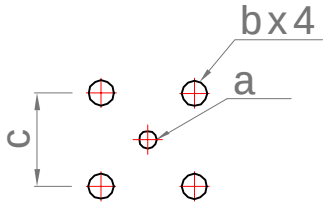

Recommended PCB Layout

Electrical :

Impedance : 75 ohm

Voltage Rating : ≧500 V rms. (depending on cable)

Insulator Resistance : ≧5 GΩ

Dielectric Withstanding Voltage : 1500 V rms .

Contact Resistance : Center Contact ≦1.5 mΩ.

Outer Contact ≦1 mΩ .

VSWR : < 1.2 (0 ~ 10 GHz)

< 1.35 (10 ~ 12 GHz)

Type	Dimensions					
	A	B	C	a	b	c
P0	1.0	1.2	6.5	1.2	1.9	6.5

Mechanical :

Mating : Bayonet Coupling.

Engagement Force : 0.6~2.5 lbs

Environmental :

Temperature Range : -65°C to 165°C

Corrosion (Salt Spray) : MIL-STD-202, Method 101, Cond. C

Thermal Shock : MIL-STD-202, Method 107, Cond. B

Mechanical : MIL-STD-202, Method 213, Cond. G

Vibration : MIL-STD-202, Method 204, Cond. B

Notes :

1. The overall contour may be slightly changed per terminating with different cable and we reserve right to change it without notice.
2. Any changes for interface dimensions are strictly prohibited.
3. The Material and plating are in various options per customer's request.
4. A complete information for connectors is available upon request.

Scale	Abbr.	Date	Rev.
NTS	ST	2019/06/20	B

Tolerances :
.X ±0.2
.XX ±0.1
.XXX ±0.05

All Dimensions in mm (Unless Otherwise Specified)

Proprietary Note
This document contains information proprietary to S-Conn, which is either copyrighted, or patent applied for, and / or protected by trade secret laws.
This document or parts thereof, may not be used, disclosed or reproduced in any form by any method, or for any purpose, without the written permission of S-Conn, Taiwan.

Customer P/N: Nil

DWG.NO. HB256

RoHS 2

TITLE

BNC R/A Bulkhead Jack, PCB Mount Type (75Ω)

Drawn	Checked	Approved
Mark	Ryan	G.Sun
2019/06/20	2019/06/20	2019/06/20

S-Conn Enterprise Co., Ltd.

S-CONN Let's Connect The World!